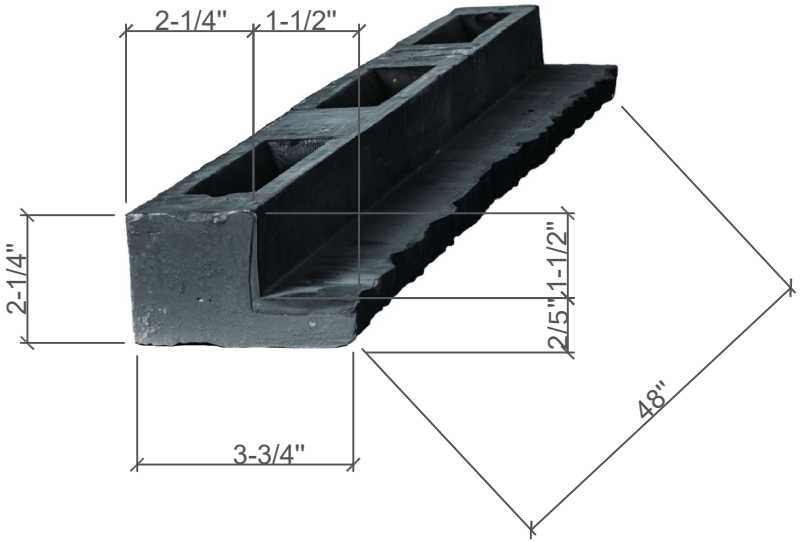

Trim Back

Trim Front

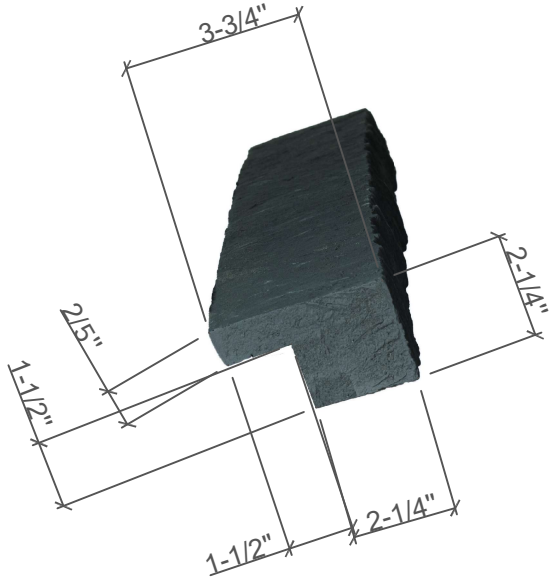

Trim Profile